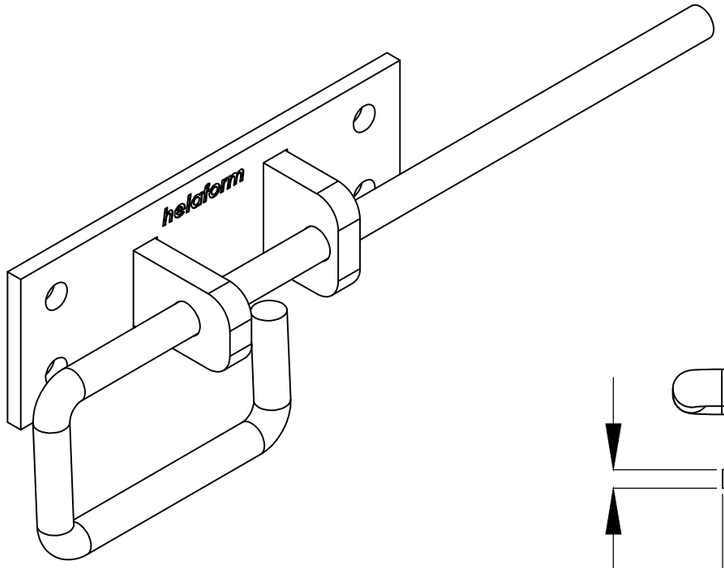

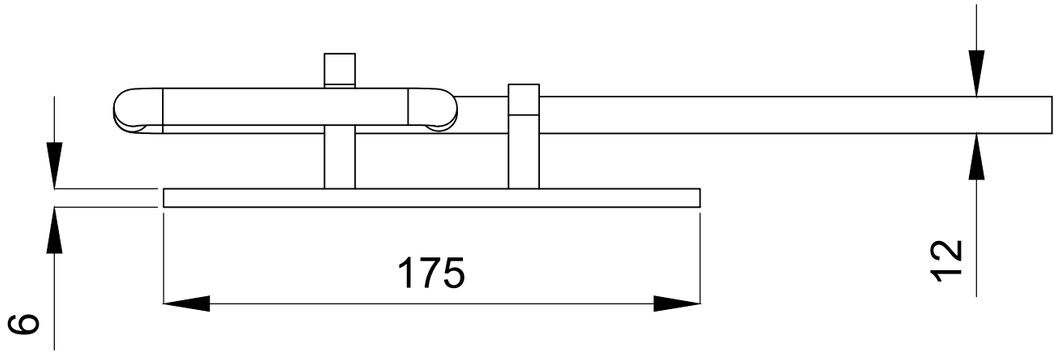

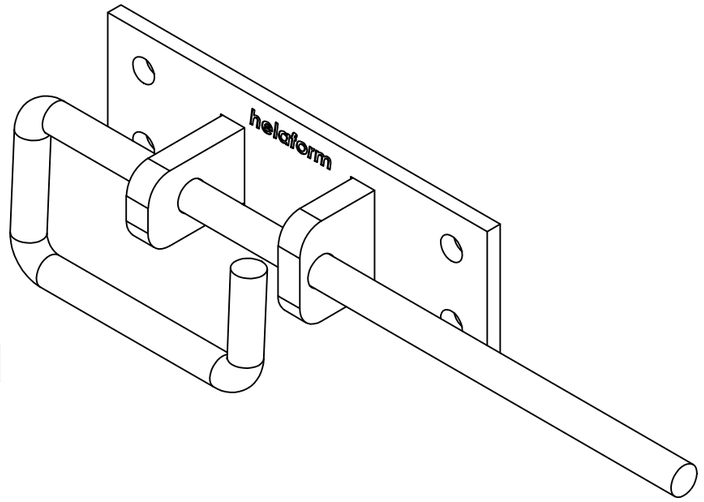

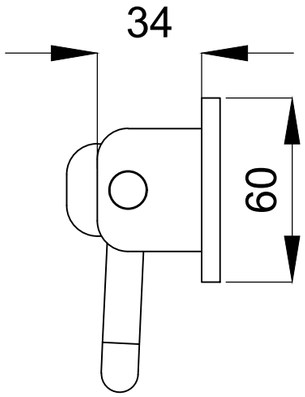

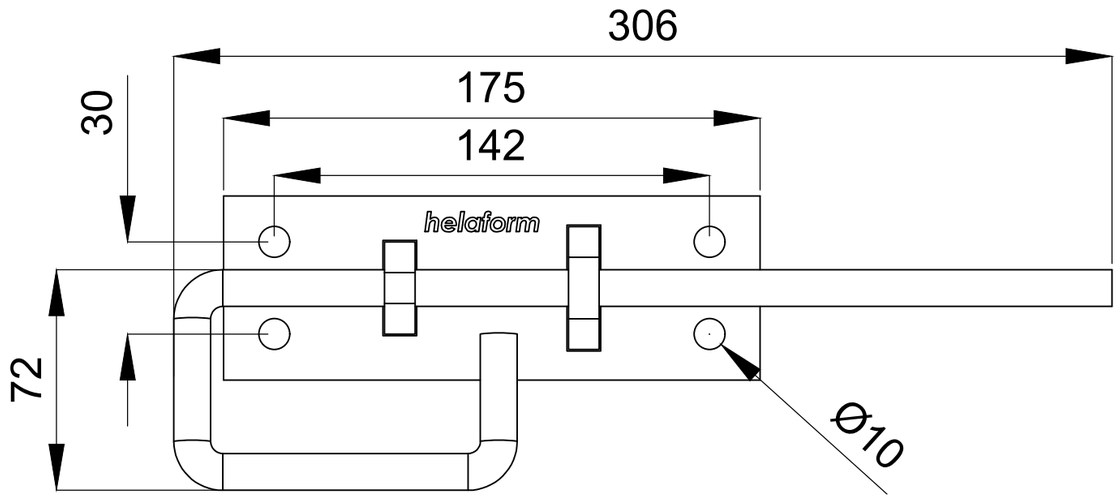

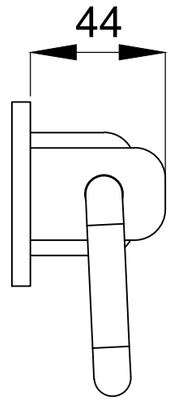

Nimike / Description	Tuotenumero / Product Nr.	Tuotesarja / Product Series	Piirtäjä / By	Mittakaava / Scale	Rev
Maasalpa / Drop bolt MS-12	50400	Series 300/500/900/2000	HV/AM	1:3 A3	01

1.		5.		9.		13.	
2.		6.		10.		14.	
3.		7.		11.		15.	
4.		8.		12.		16.	

Huomiot / Notes

1. Drawing is for reference only and subject to change without notice.
2. All product dimensions are in millimeter.
3. Door panels (/movable objects) are not in scale.

helaform