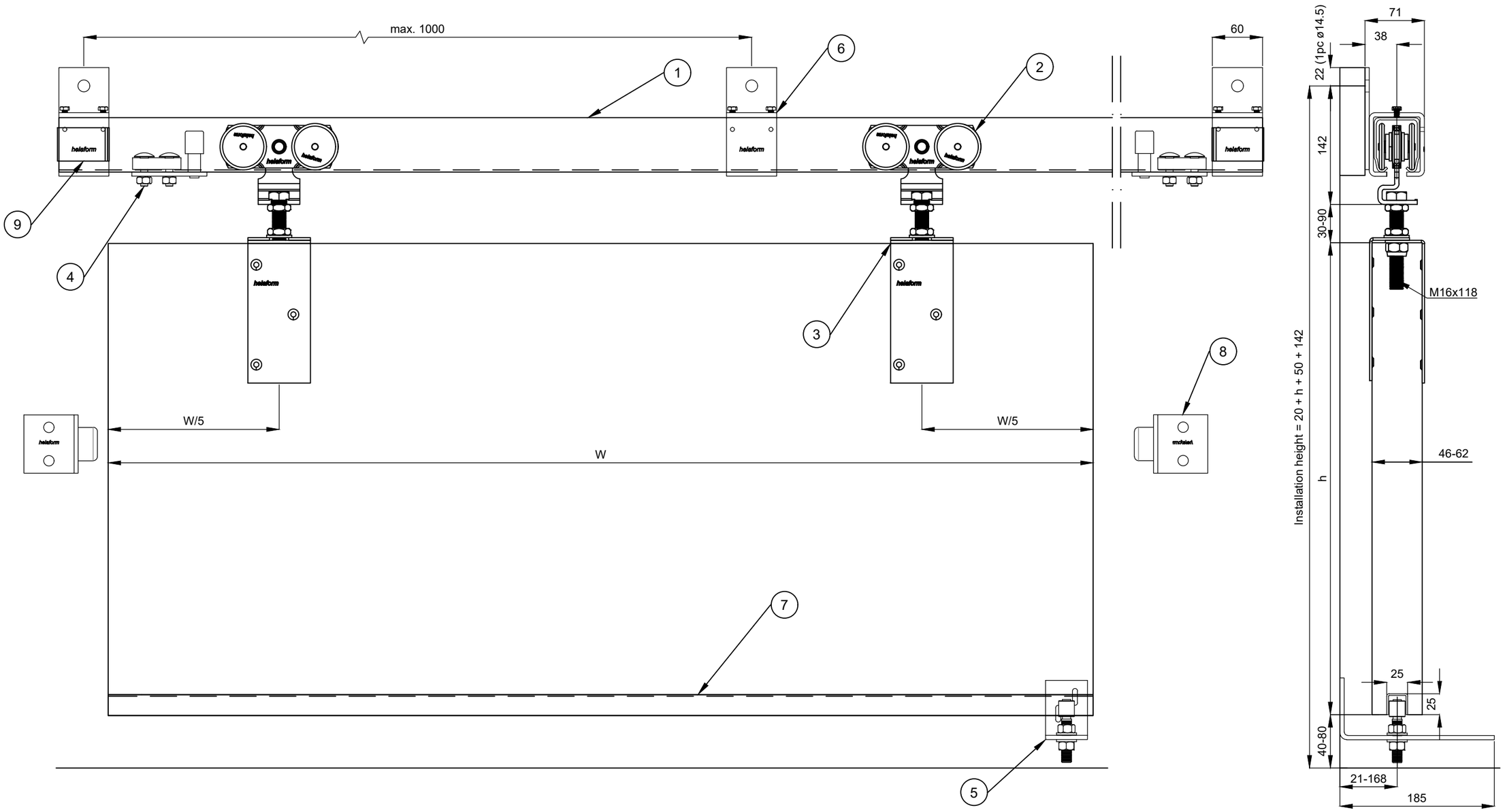

Nimike / Description	Tuotenumero / Product Nr.	Tuotesarja / Product Series	Piirtäjä / By	Mittakaava / Scale	Rev
Tarvikesarja 300/500 / Assembly set 300/500	50600* (1)	Series 300/500	AM	1:5 A3	01

1.	Track K-300 / K-500	5.	Bottom guide AO-12*	9.	End clip PK-300/500*	13.	
2.	Hanger MPS-300/500*	6.	Bracket SKL-300/500*	10.		14.	
3.	Plate PLS-300/500*	7.	Bottom guide channel AOK-25x25	11.		15.	
4.	Track stop KP-300/500*	8.	Wall stop P	12.		16.	

Huomiot / Notes

1. Drawing is for reference only and subject to change without notice.
2. All product dimensions are in millimeter.
3. Door panels (/movable objects) are not in scale.

helaform

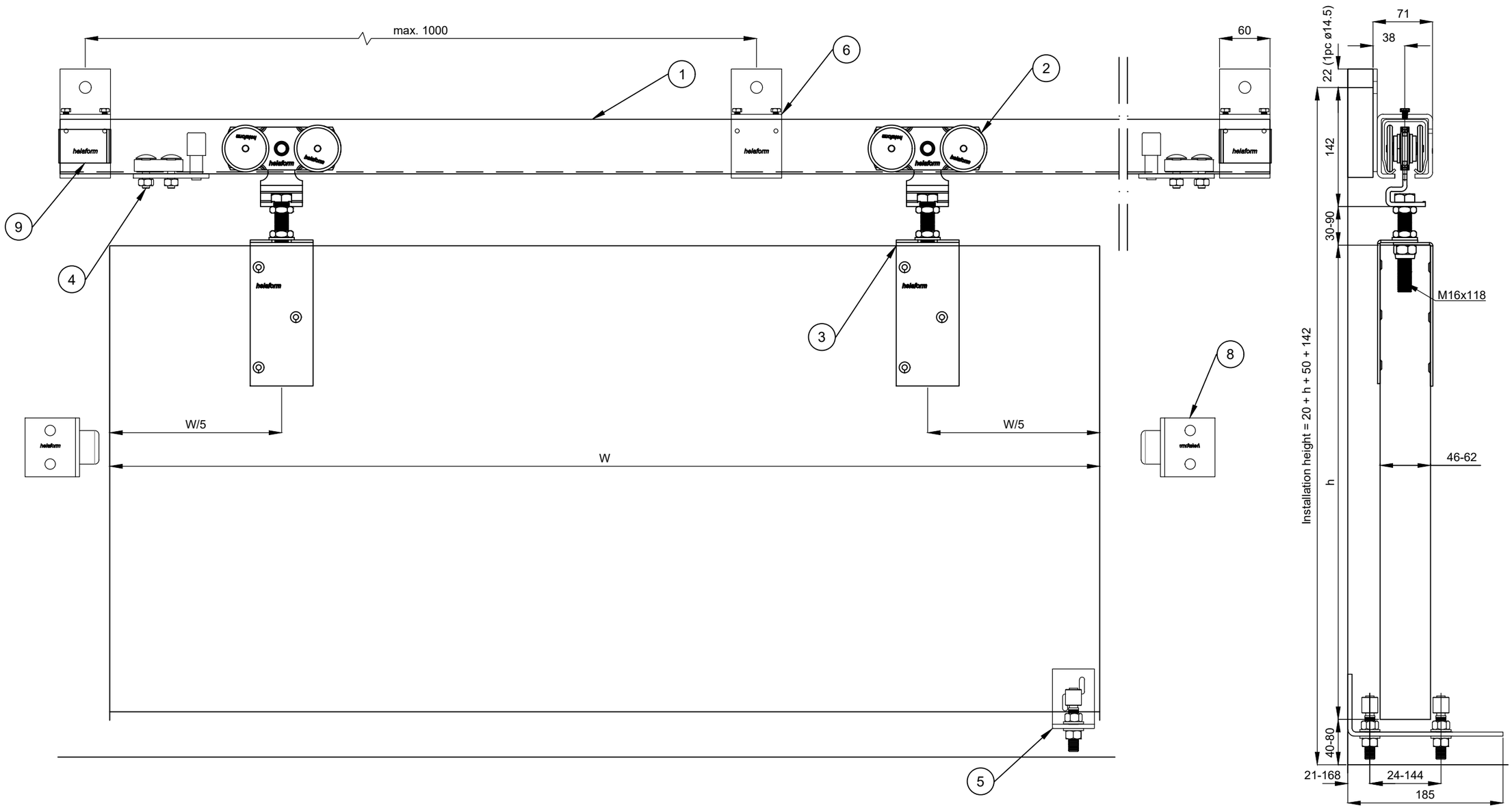

Nimike / Description	Tuotenumero / Product Nr.	Tuotesarja / Product Series	Piirtäjä / By	Mittakaava / Scale	Rev
Tarvikesarja 300/500 / Assembly set 300/500	50600* (2)	Series 300/500	AM	1:5 A3	01

1.	Track K-300 / K-500	5.	Bottom guide AO-22*	9.		13.	
2.	Hanger MPS-300/500*	6.	Bracket SKL-300/500*	10.		14.	
3.	Plate PLS-300/500*	7.	Wall stop P	11.		15.	
4.	Track stop KP-300/500*	8.	End clip PK-300/500*	12.		16.	

Huomiot / Notes

1. Drawing is for reference only and subject to change without notice.
2. All product dimensions are in millimeter.
3. Door panels (/movable objects) are not in scale.

helaform