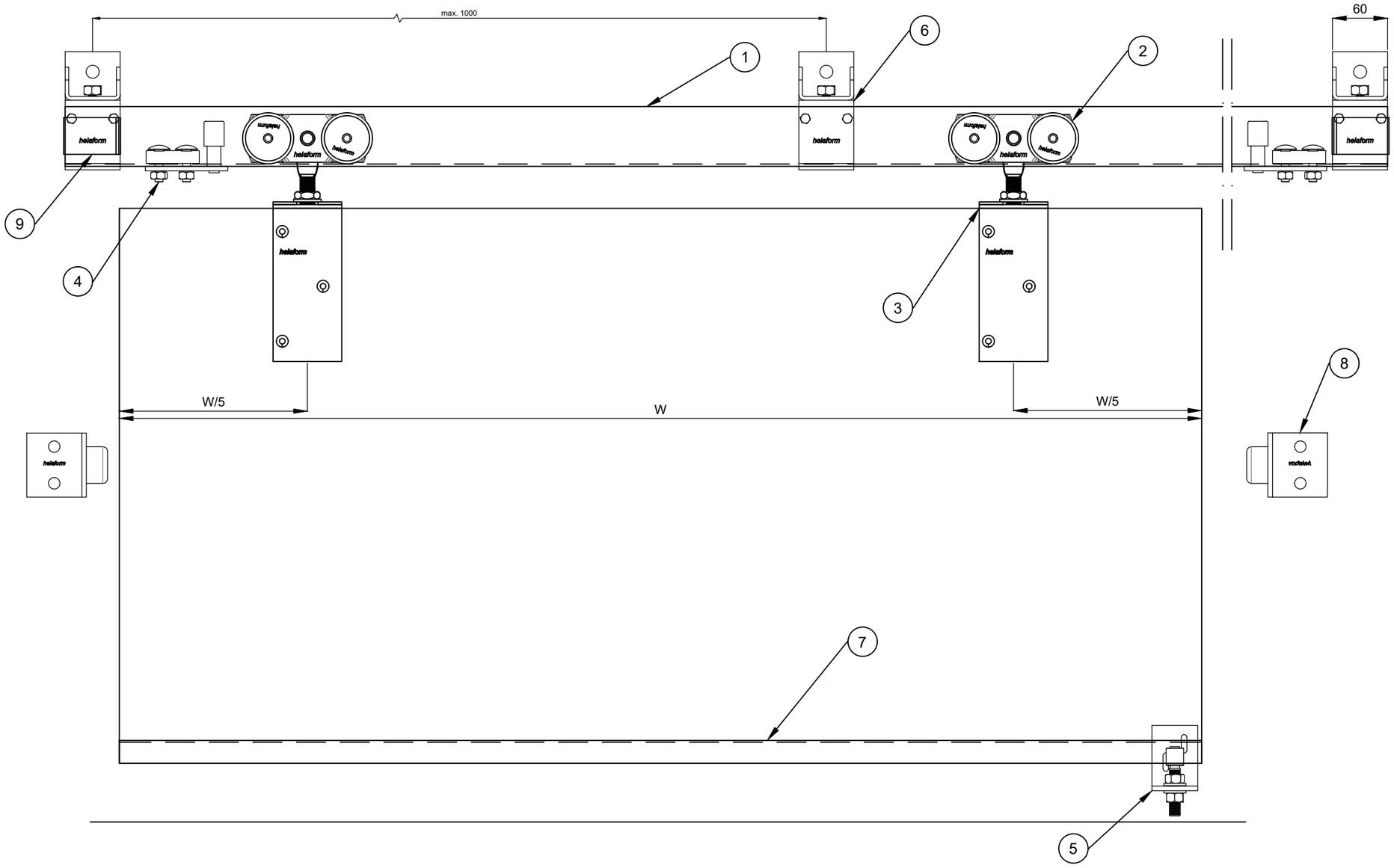

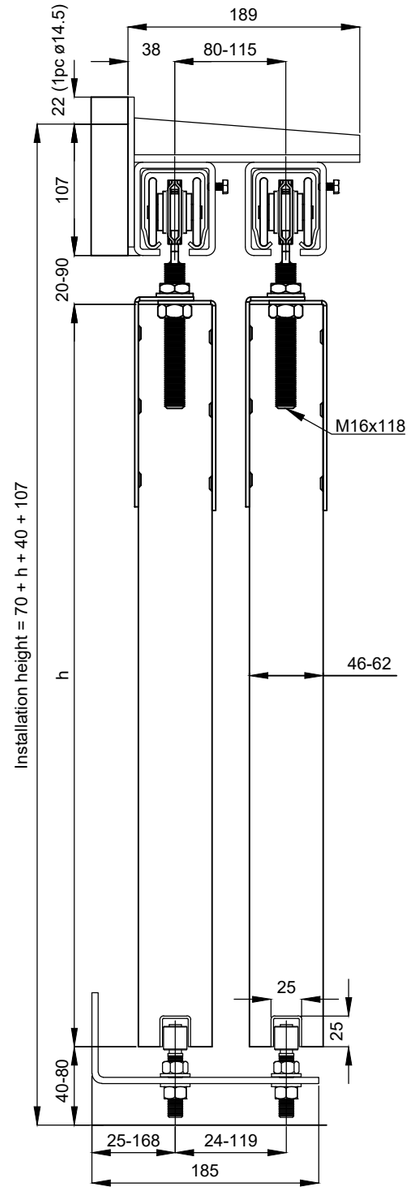

Nimike / Description	Tuotenumero / Product Nr.	Tuotesarja / Product Series	Piirtäjä / By	Mittakaava / Scale	Rev
Series 300/500 (seinä/wall): MP/PLS/AO/Pariliukuovi/Double sliding door	(assembly S224-01)	Series 300/500	AM	1:5 A3	01

1.	Track K-300 / K-500	5.	Bottom guide AO-22	9.	End clip PK-300/500	13.	
2.	Hanger MP-300/500	6.	Bracket SKL/2-300/500	10.		14.	
3.	Plate PLS-300/500	7.	Bottom guide channel AOK-25x25	11.		15.	
4.	Track stop KP-300/500	8.	Wall stop P	12.		16.	

Huomiot / Notes

1. Drawing is for reference only and subject to change without notice.
2. All product dimensions are in millimeter.
3. Door panels (/movable objects) are not in scale.

helaform